Tapered roller bearing 4T-32219 NTN

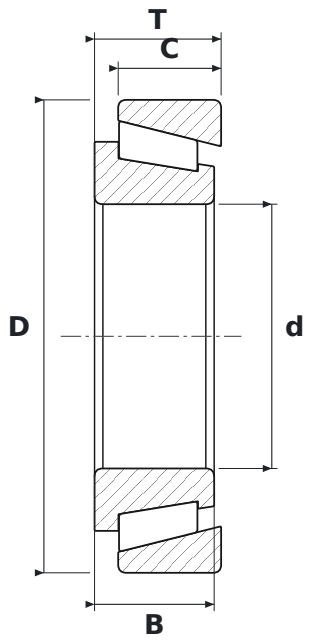

DIMENSIONS

d	bore diameter	**95 mm**
D	outside diameter	**170 mm**
T	total width	**45.5 mm**
B	inner ring width	**43 mm**
C	outer ring width	**37 mm**

SPECIFICATIONS

Manufacturer	**NTN**
Manufacturer designation	**4T-32219**
B – inner ring width	**43 mm**
C – outer ring width	**37 mm**
Rolling elements	**tapered roller bearing**
Seal	**open – no seals**
Mass	**4.33 kg**