Tapered roller bearing 4T-33013 NTN

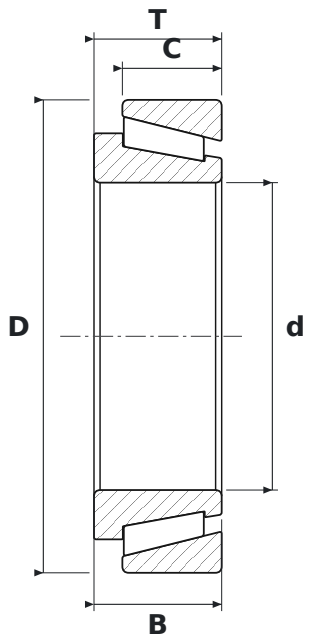

DIMENSIONS

d	bore diameter	**65 mm**
D	outside diameter	**100 mm**
T	total width	**27 mm**
B	inner ring width	**27 mm**
C	outer ring width	**21 mm**

SPECIFICATIONS

Manufacturer	**NTN**
Manufacturer designation	**4T-33013**
B – inner ring width	**27 mm**
C – outer ring width	**21 mm**
Rolling elements	**tapered roller bearing**
Seal	**open – no seals**
Mass	**0.76 kg**