Tapered roller bearing 4T-33208 NTN

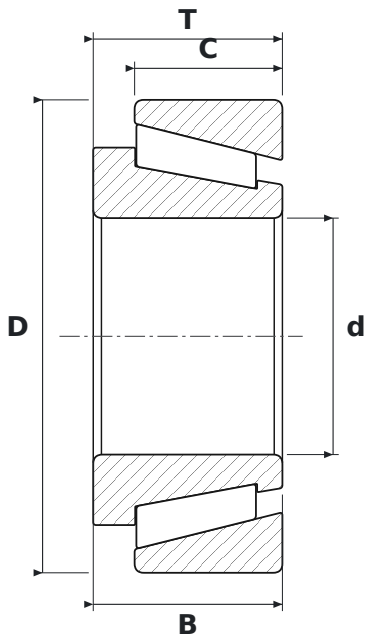

DIMENSIONS

d	bore diameter	**40 mm**
D	outside diameter	**80 mm**
T	total width	**32 mm**
B	inner ring width	**32 mm**
C	outer ring width	**25 mm**

SPECIFICATIONS

Manufacturer	**NTN**
Manufacturer designation	**4T-33208**
B – inner ring width	**32 mm**
C – outer ring width	**25 mm**
Rolling elements	**tapered roller bearing**
Seal	**open – no seals**