Tapered roller bearing 4T-365/362 A NTN

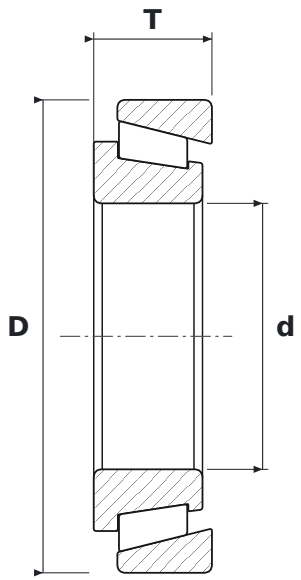

DIMENSIONS

d	bore diameter	**50 mm**
D	outside diameter	**88.9 mm**
T	total width	**22.23 mm**

SPECIFICATIONS

Manufacturer	**NTN**
Manufacturer designation	**4T-365/362 A**
Rolling elements	**tapered roller bearing**
Seal	**open – no seals**