# Tapered roller bearing 4T-365/362 NTN

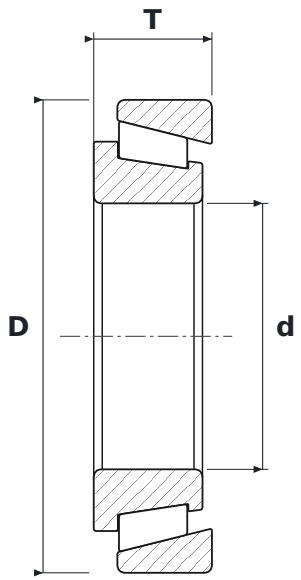


## DIMENSIONS

| | | |
|---|---|---|
| **d** | bore diameter | **50 mm** |
| **D** | outside diameter | **88.9 mm** |
| **T** | total width | **22.23 mm** |

## SPECIFICATIONS

| | |
|---|---|
| Manufacturer | **NTN** |
| Manufacturer designation | **4T-365/362** |
| Rolling elements | **tapered roller bearing** |
| Seal | **open – no seals** |
| Mass | **0.554 kg** |