Tapered roller bearing 4T-3994/3920 NTN

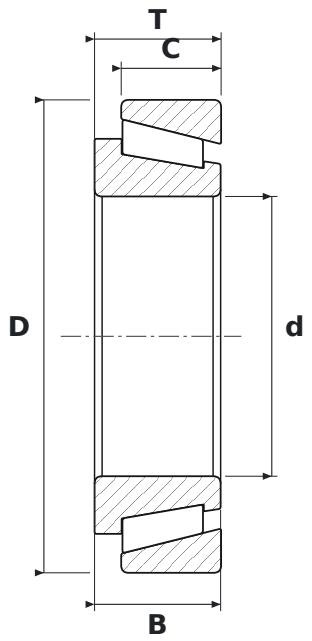

DIMENSIONS

d	bore diameter	**66.68 mm**
D	outside diameter	**112.71 mm**
T	total width	**30.16 mm**
B	inner ring width	**30.05 mm**
C	outer ring width	**23.81 mm**

SPECIFICATIONS

Manufacturer	**NTN**
Manufacturer designation	**4T-3994/3920**
B – inner ring width	**30.05 mm**
C – outer ring width	**23.81 mm**
Rolling elements	**tapered roller bearing**
Seal	**open – no seals**
Mass	**1.192 kg**