Tapered roller bearing 4T-45285/45220 NTN

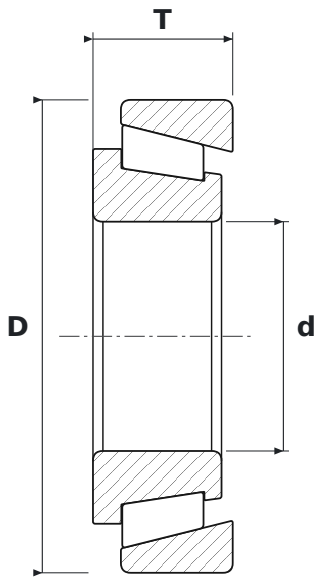

DIMENSIONS

d	bore diameter	**50.8 mm**
D	outside diameter	**104.78 mm**
T	total width	**30.96 mm**

SPECIFICATIONS

Manufacturer	**NTN**
Manufacturer designation	**4T-45285/45220**
Rolling elements	**tapered roller bearing**
Seal	**open – no seals**