Tapered roller bearing 4T-47687/47620 NTN

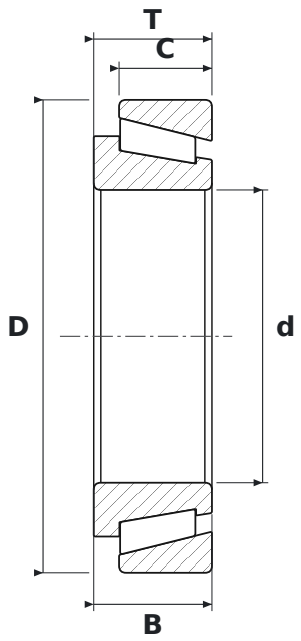

DIMENSIONS

d	bore diameter	**82.55 mm**
D	outside diameter	**133.35 mm**
T	total width	**33.34 mm**
B	inner ring width	**33.34 mm**
C	outer ring width	**26.2 mm**

SPECIFICATIONS

Manufacturer	**NTN**
Manufacturer designation	**4T-47687/47620**
B – inner ring width	**33.34 mm**
C – outer ring width	**26.2 mm**
Rolling elements	**tapered roller bearing**
Seal	**open – no seals**