Tapered roller bearing 4T-78214C/78551 NTN

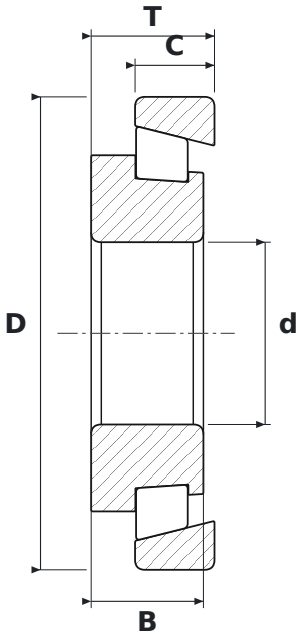

DIMENSIONS

d	bore diameter	**53.98 mm**
D	outside diameter	**140.03 mm**
T	total width	**36.51 mm**
B	inner ring width	**33.24 mm**
C	outer ring width	**23.52 mm**

SPECIFICATIONS

Manufacturer	**NTN**
Manufacturer designation	**4T-78214C/78551**
B – inner ring width	**33.24 mm**
C – outer ring width	**23.52 mm**
Rolling elements	**tapered roller bearing**
Seal	**open – no seals**