Tapered roller bearing 4T-JLM506849/810 NTN

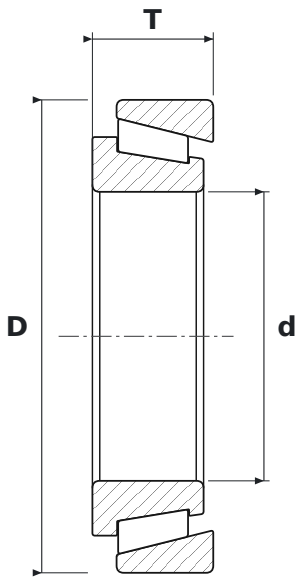

DIMENSIONS

d	bore diameter	**55 mm**
D	outside diameter	**90 mm**
T	total width	**23 mm**

SPECIFICATIONS

Manufacturer	**NTN**
Manufacturer designation	**4T-JLM506849/810**
Rolling elements	**tapered roller bearing**