Tapered roller bearing 4T-JM207049/010 NTN

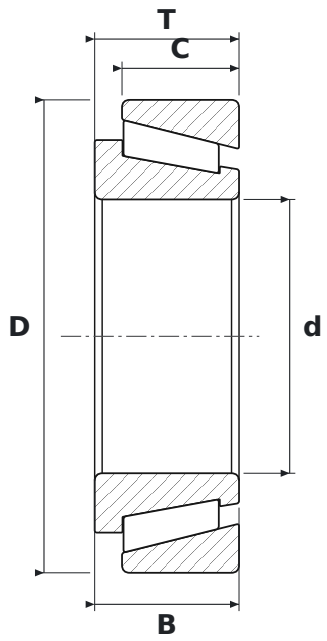

DIMENSIONS

d	bore diameter	**55 mm**
D	outside diameter	**95 mm**
T	total width	**29 mm**
B	inner ring width	**29 mm**
C	outer ring width	**23.5 mm**

SPECIFICATIONS

Manufacturer	**NTN**
Manufacturer designation	**4T-JM207049/010**
B – inner ring width	**29 mm**
C – outer ring width	**23.5 mm**
Rolling elements	**tapered roller bearing**