Tapered roller bearing 4T-L44643/L44610 NTN

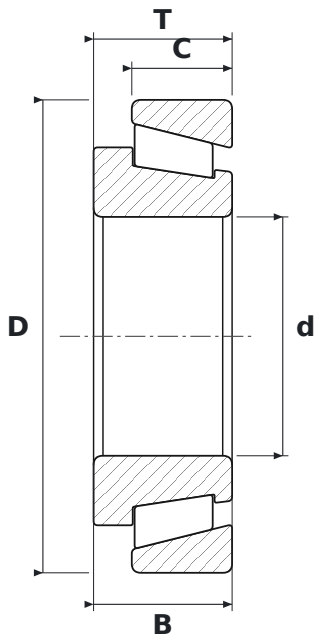

DIMENSIONS

d	bore diameter	**25.4 mm**
D	outside diameter	**50.29 mm**
T	total width	**14.73 mm**
B	inner ring width	**14.73 mm**
C	outer ring width	**10.67 mm**

SPECIFICATIONS

Manufacturer	**NTN**
Manufacturer designation	**4T-L44643/L44610**
B – inner ring width	**14.73 mm**
C – outer ring width	**10.67 mm**
Rolling elements	**tapered roller bearing**