Tapered roller bearing 4T-LM29749/710 NTN

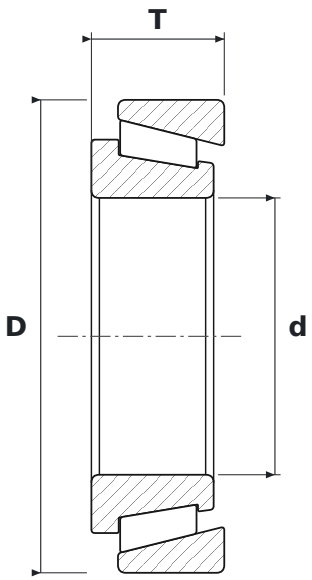

DIMENSIONS

d	bore diameter	**38.1 mm**
D	outside diameter	**65.09 mm**
T	total width	**18.29 mm**

SPECIFICATIONS

Manufacturer	**NTN**
Manufacturer designation	**4T-LM29749/710**
Rolling elements	**tapered roller bearing**