Tapered roller bearing 580/572 Q SKF

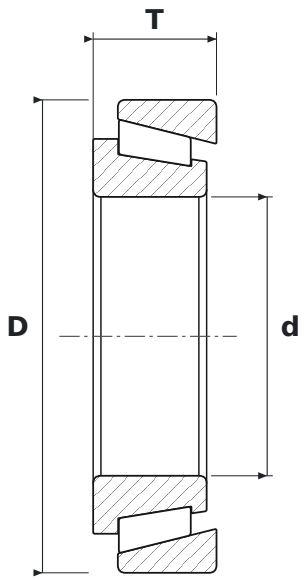

DIMENSIONS

d	bore diameter	**82.55 mm**
D	outside diameter	**139.99 mm**
T	total width	**36.51 mm**

SPECIFICATIONS

Manufacturer	**SKF**
Manufacturer designation	**580/572 Q**
Rolling elements	**tapered roller bearing**
Seal	**open – no seals**
Mass	**2.179 kg**