Tapered roller bearing 580R/572 KOYO

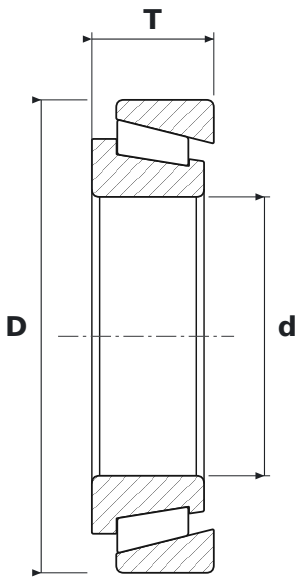

DIMENSIONS

d	bore diameter	**82.55 mm**
D	outside diameter	**139.99 mm**
T	total width	**36.1 mm**

SPECIFICATIONS

Manufacturer	**KOYO**
Manufacturer designation	**580R/572**
Rolling elements	**tapered roller bearing**
Seal	**open – no seals**