Tapered roller bearing 598A/592 A KOYO

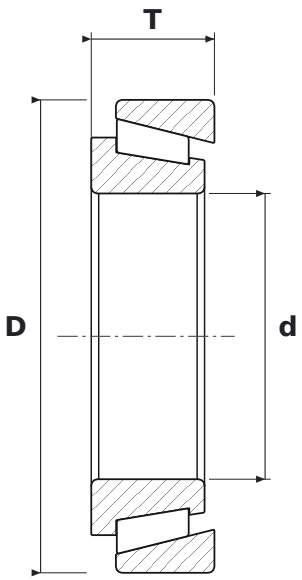

DIMENSIONS

d	bore diameter	**92.08 mm**
D	outside diameter	**152.4 mm**
T	total width	**39.69 mm**

SPECIFICATIONS

Manufacturer	**KOYO**
Manufacturer designation	**598A/592 A**
Rolling elements	**tapered roller bearing**
Seal	**open – no seals**