Tapered roller bearing 665/653 KOYO

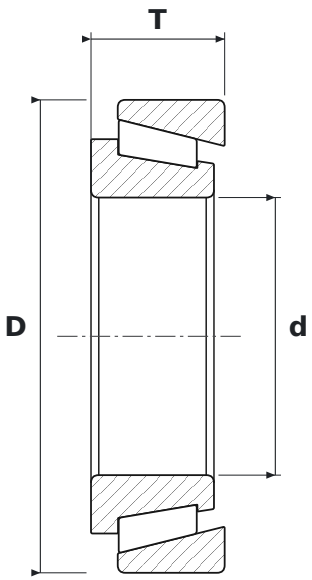

DIMENSIONS

d	bore diameter	**85.73 mm**
D	outside diameter	**146.05 mm**
T	total width	**41.28 mm**

SPECIFICATIONS

Manufacturer	**KOYO**
Manufacturer designation	**665/653**
Rolling elements	**tapered roller bearing**
Seal	**open – no seals**