Tapered roller bearing HC30308 JR KOYO

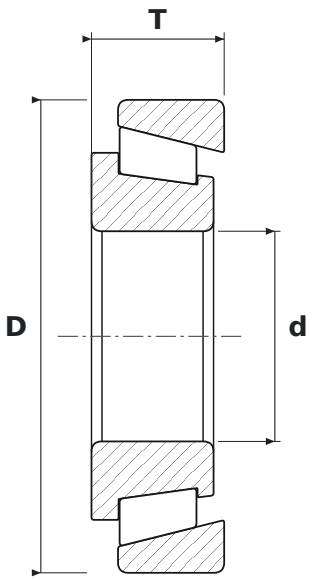

DIMENSIONS

d	bore diameter	**40 mm**
D	outside diameter	**90 mm**
T	total width	**25.25 mm**

SPECIFICATIONS

Manufacturer	**KOYO**
Manufacturer designation	**HC30308 JR**
Rolling elements	**tapered roller bearing**
JR	**riveted pressed steel cage (FAG)**
Seal	**open – no seals**
Features	**Hybrid (ceramic balls)**