Tapered roller bearing HH221449/10 KOYO

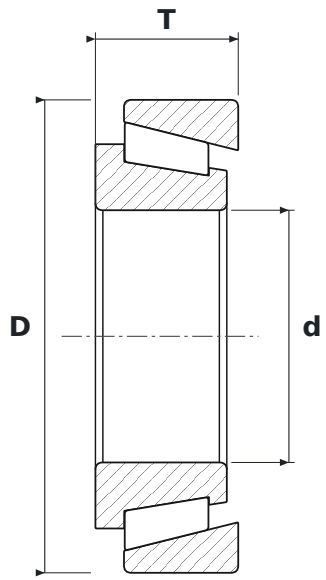

DIMENSIONS

d	bore diameter	**101.6 mm**
D	outside diameter	**190.5 mm**
T	total width	**57.53 mm**

SPECIFICATIONS

Manufacturer	**KOYO**
Manufacturer designation	**HH221449/10**
Rolling elements	**tapered roller bearing**
Seal	**open – no seals**