Tapered roller bearing HI-CAP2580/20 KOYO

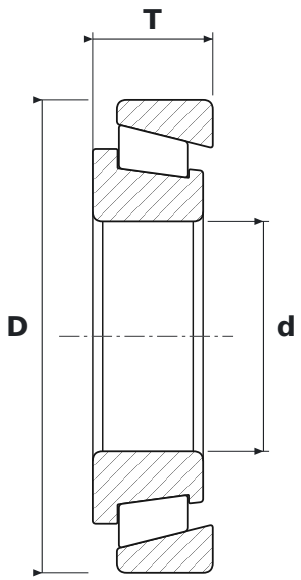

DIMENSIONS

d	bore diameter	**35 mm**
D	outside diameter	**72 mm**
T	total width	**18.25 mm**

SPECIFICATIONS

Manufacturer	**KOYO**
Manufacturer designation	**HI-CAP2580/20**
Rolling elements	**tapered roller bearing**