Tapered roller bearing HI-CAP30206 JR KOYO

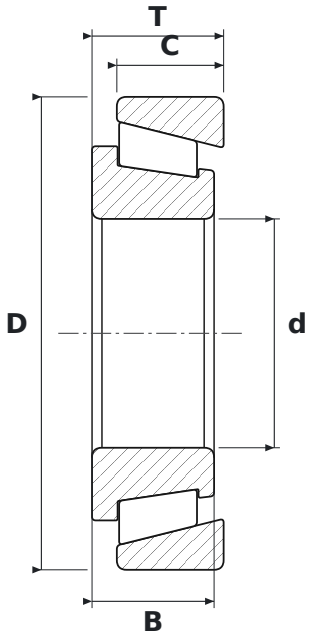

DIMENSIONS

d	bore diameter	**30 mm**
D	outside diameter	**62 mm**
T	total width	**17.25 mm**
B	inner ring width	**16 mm**
C	outer ring width	**14 mm**

SPECIFICATIONS

Manufacturer	**KOYO**
Manufacturer designation	**HI-CAP30206 JR**
B – inner ring width	**16 mm**
C – outer ring width	**14 mm**
Rolling elements	**tapered roller bearing**