CASTOMER

DATASHEET

Tapered roller bearing HI-CAP32006 JR KOYO

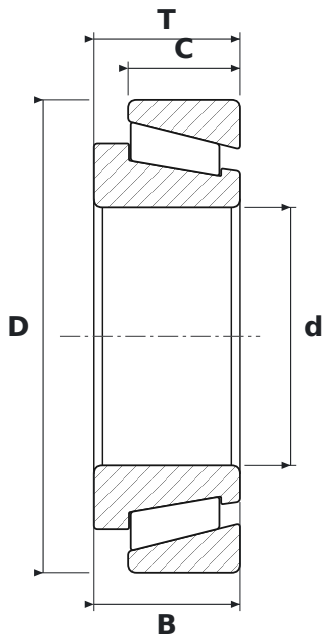

DIMENSIONS

d	bore diameter	**30 mm**
D	outside diameter	**55 mm**
T	total width	**17 mm**
B	inner ring width	**17 mm**
C	outer ring width	**13 mm**

SPECIFICATIONS

Manufacturer	**KOYO**
Manufacturer designation	**HI-CAP32006 JR**
B – inner ring width	**17 mm**
C – outer ring width	**13 mm**
Rolling elements	**tapered roller bearing**