CASTOMER

DATASHEET

# Tapered roller bearing HI-CAP32209 JR KOYO

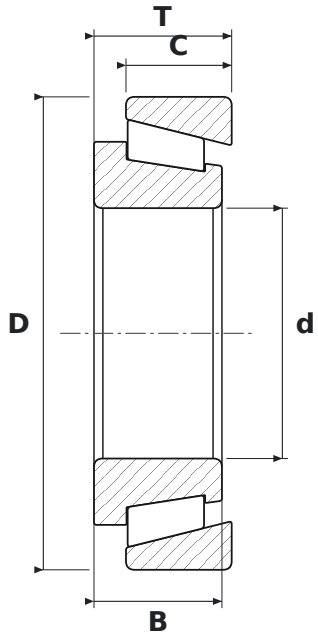


## DIMENSIONS

| | | |
|---|---|---|
| **d** | bore diameter | **45 mm** |
| **D** | outside diameter | **85 mm** |
| **T** | total width | **24.75 mm** |
| **B** | inner ring width | **23 mm** |
| **C** | outer ring width | **19 mm** |

## SPECIFICATIONS

| | |
|---|---|
| Manufacturer | **KOYO** |
| Manufacturer designation | **HI-CAP32209 JR** |
| B – inner ring width | **23 mm** |
| C – outer ring width | **19 mm** |
| Rolling elements | **tapered roller bearing** |