Tapered roller bearing HI-CAPHM88649/10 KOYO

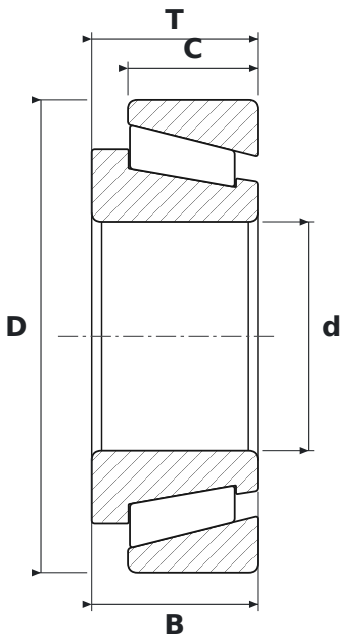

DIMENSIONS

d	bore diameter	**34.93 mm**
D	outside diameter	**72.23 mm**
T	total width	**25.4 mm**
B	inner ring width	**25.4 mm**
C	outer ring width	**19.84 mm**

SPECIFICATIONS

Manufacturer	**KOYO**
Manufacturer designation	**HI-CAPHM88649/10**
B – inner ring width	**25.4 mm**
C – outer ring width	**19.84 mm**
Rolling elements	**tapered roller bearing**