Tapered roller bearing HM212049/11 KOYO

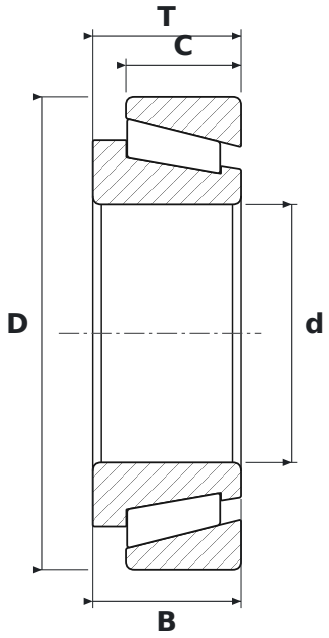

DIMENSIONS

d	bore diameter	**66.68 mm**
D	outside diameter	**122.24 mm**
T	total width	**38.35 mm**
B	inner ring width	**38.35 mm**
C	outer ring width	**29.72 mm**

SPECIFICATIONS

Manufacturer	**KOYO**
Manufacturer designation	**HM212049/11**
B – inner ring width	**38.35 mm**
C – outer ring width	**29.72 mm**
Rolling elements	**tapered roller bearing**
Seal	**open – no seals**