Tapered roller bearing HM218248/10 KOYO

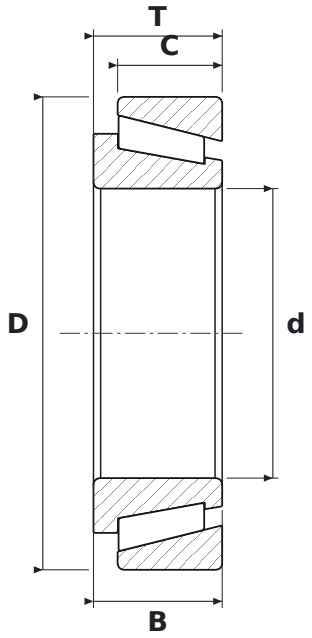

DIMENSIONS

d	bore diameter	**89.97 mm**
D	outside diameter	**146.98 mm**
T	total width	**40 mm**
B	inner ring width	**40 mm**
C	outer ring width	**32.5 mm**

SPECIFICATIONS

Manufacturer	**KOYO**
Manufacturer designation	**HM218248/10**
B – inner ring width	**40 mm**
C – outer ring width	**32.5 mm**
Rolling elements	**tapered roller bearing**
Seal	**open – no seals**