Tapered roller bearing HM518445/10 KOYO

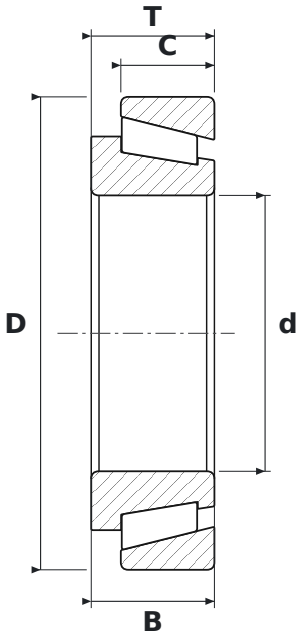

DIMENSIONS

d	bore diameter	**88.9 mm**
D	outside diameter	**152.4 mm**
T	total width	**39.69 mm**
B	inner ring width	**39.69 mm**
C	outer ring width	**30.16 mm**

SPECIFICATIONS

Manufacturer	**KOYO**
Manufacturer designation	**HM518445/10**
B – inner ring width	**39.69 mm**
C – outer ring width	**30.16 mm**
Rolling elements	**tapered roller bearing**
Seal	**open – no seals**