Tapered roller bearing KLM29749/LM29710 FAG

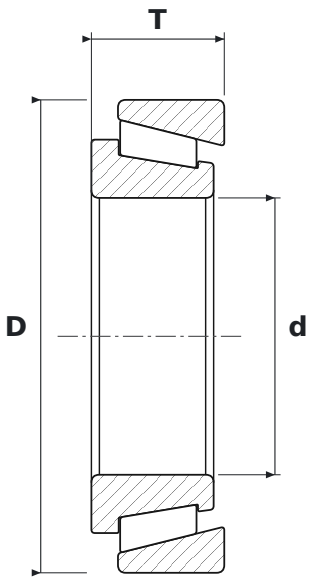

DIMENSIONS

d	bore diameter	**38.1 mm**
D	outside diameter	**65.09 mm**
T	total width	**18.29 mm**

SPECIFICATIONS

Manufacturer	**FAG**
Manufacturer designation	**KLM29749/LM29710**
Rolling elements	**tapered roller bearing**
M	**machined brass cage**
Seal	**open – no seals**