Tapered roller bearing L44643/610 /VU990 SKF

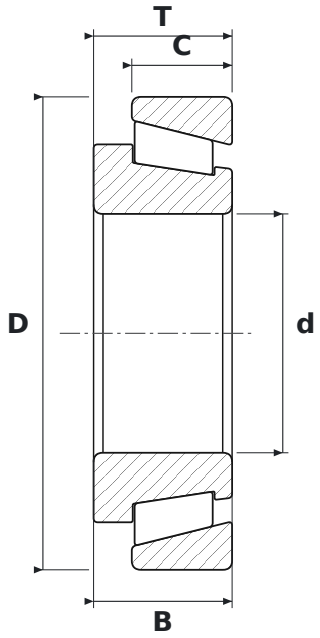

DIMENSIONS

d	bore diameter	**25.4 mm**
D	outside diameter	**50.29 mm**
T	total width	**14.73 mm**
B	inner ring width	**14.73 mm**
C	outer ring width	**10.67 mm**

SPECIFICATIONS

Manufacturer	**SKF**
Manufacturer designation	**L44643/610 /VU990**
B – inner ring width	**14.73 mm**
C – outer ring width	**10.67 mm**
Rolling elements	**tapered roller bearing**
Seal	**open – no seals**