Tapered roller bearing LM11749/710 /VA983 SKF

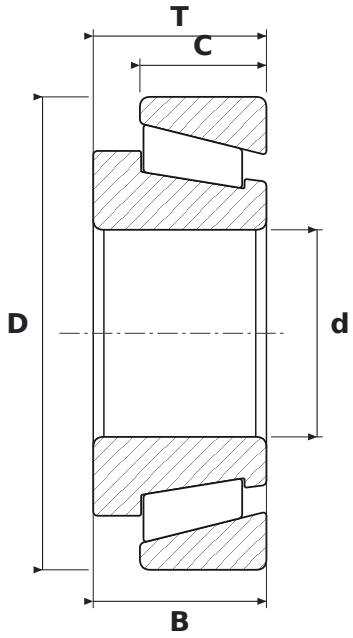

DIMENSIONS

d	bore diameter	**17.46 mm**
D	outside diameter	**39.88 mm**
T	total width	**14.61 mm**
B	inner ring width	**14.61 mm**
C	outer ring width	**10.67 mm**

SPECIFICATIONS

Manufacturer	**SKF**
Manufacturer designation	**LM11749/710 /VA983**
B – inner ring width	**14.61 mm**
C – outer ring width	**10.67 mm**
Rolling elements	**tapered roller bearing**
Seal	**open – no seals**