Tapered roller bearing LM48548/510 Q SKF

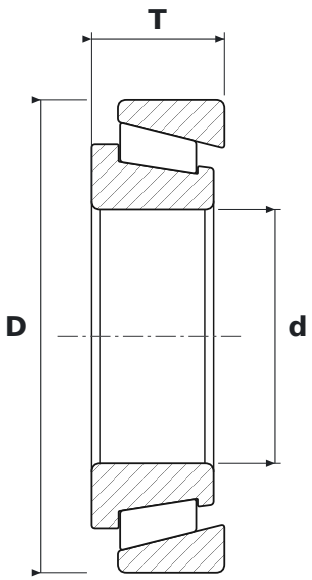

DIMENSIONS

d	bore diameter	**34.93 mm**
D	outside diameter	**65.09 mm**
T	total width	**18.29 mm**

SPECIFICATIONS

Manufacturer	**SKF**
Manufacturer designation	**LM48548/510 Q**
Rolling elements	**tapered roller bearing**
Seal	**open – no seals**