Tapered roller bearing LM603049/011 /Q SKF

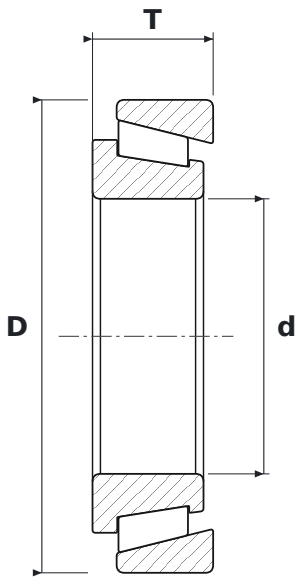

DIMENSIONS

d	bore diameter	**45.24 mm**
D	outside diameter	**77.79 mm**
T	total width	**19.84 mm**

SPECIFICATIONS

Manufacturer	**SKF**
Manufacturer designation	**LM603049/011 /Q**
Rolling elements	**tapered roller bearing**
Seal	**open – no seals**