Tapered roller bearing M12649/610 SKF

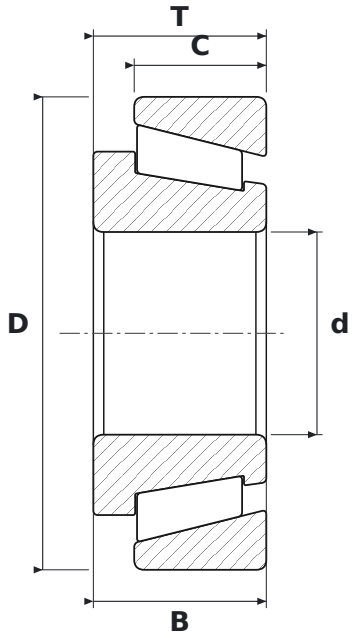

DIMENSIONS

d	bore diameter	**21.43 mm**
D	outside diameter	**50.01 mm**
T	total width	**18.29 mm**
B	inner ring width	**18.29 mm**
C	outer ring width	**13.97 mm**

SPECIFICATIONS

Manufacturer	**SKF**
Manufacturer designation	**M12649/610**
B – inner ring width	**18.29 mm**
C – outer ring width	**13.97 mm**
Rolling elements	**tapered roller bearing**
Seal	**open – no seals**