# Tapered roller bearing NP787790-90KA1 TIMKEN

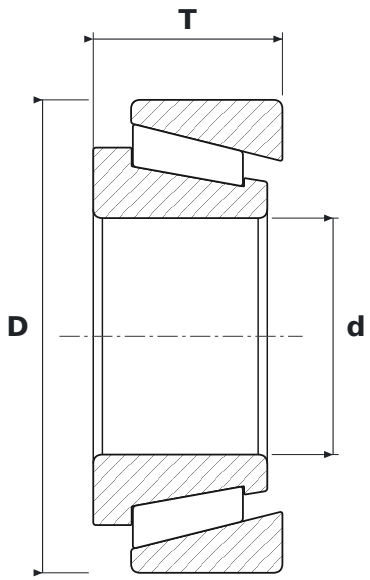


## DIMENSIONS

| | | |
|---|---|---|
| **d** | bore diameter | **40 mm** |
| **D** | outside diameter | **80 mm** |
| **T** | total width | **32 mm** |

## SPECIFICATIONS

| | |
|---|---|
| Manufacturer | **TIMKEN** |
| Manufacturer designation | **NP787790-90KA1** |
| Rolling elements | **tapered roller bearing** |
| Seal | **open – no seals** |