Tapered roller bearing S30205 ZEN

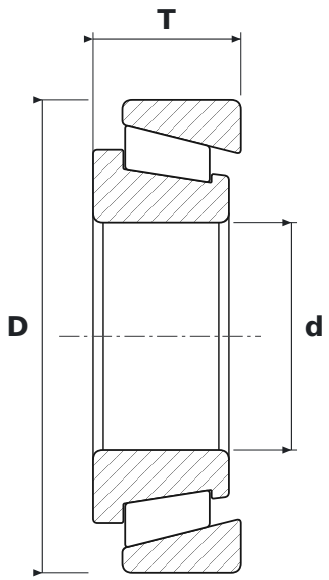

DIMENSIONS

d	bore diameter	**25 mm**
D	outside diameter	**52 mm**
T	total width	**16.25 mm**

SPECIFICATIONS

Manufacturer	**ZEN**
Manufacturer designation	**S30205**
Rolling elements	**tapered roller bearing**
Seal	**open – no seals**
Features	**Stainless steel**
Mass	**0.155 kg**