Tapered roller bearing U399-90010 TIMKEN

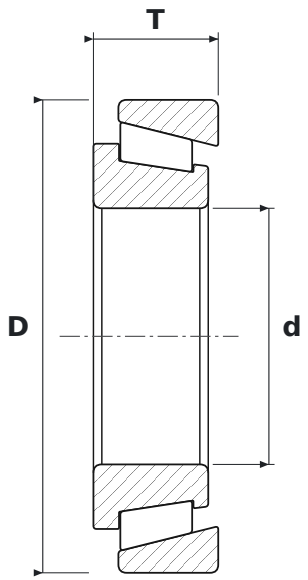

DIMENSIONS

d	bore diameter	**39.62 mm**
D	outside diameter	**73.15 mm**
T	total width	**19.3 mm**

SPECIFICATIONS

Manufacturer	**TIMKEN**
Manufacturer designation	**U399-90010**
Rolling elements	**tapered roller bearing**
Seal	**open – no seals**