Cylindrical roller bearing ARZ71226.4 NADELLA

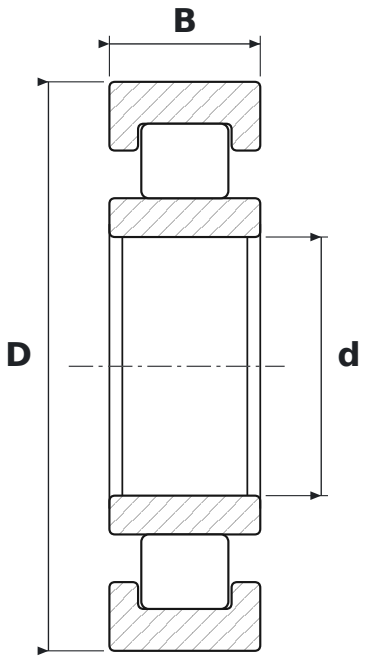

DIMENSIONS

d	bore diameter	**12 mm**
D	outside diameter	**26.4 mm**
B	width	**7 mm**

SPECIFICATIONS

Manufacturer	**NADELLA**
Manufacturer designation	**ARZ71226.4**
Rolling elements	**cylindrical roller bearing**
Seal	**open – no seals**
Radial internal clearance	**CN – normal**