Cylindrical roller bearing LRJ1.1/2 NKE

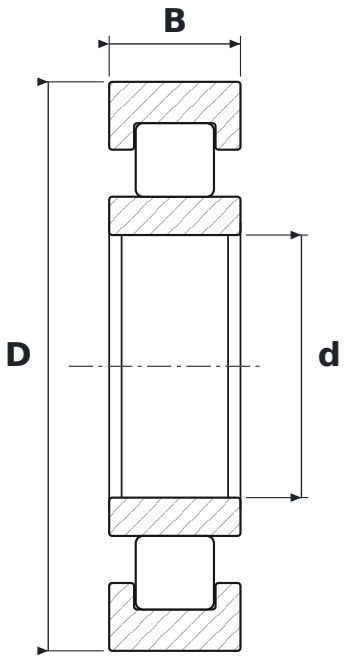

DIMENSIONS

d	bore diameter	**38.1 mm**
D	outside diameter	**82.55 mm**
B	width	**19.05 mm**

SPECIFICATIONS

Manufacturer	**NKE**
Manufacturer designation	**LRJ1.1/2**
Rolling elements	**cylindrical roller bearing**
Radial internal clearance	**CN – normal**
Mass	**0.454 kg**