Cylindrical roller bearing LRJ1.3/8 NKE

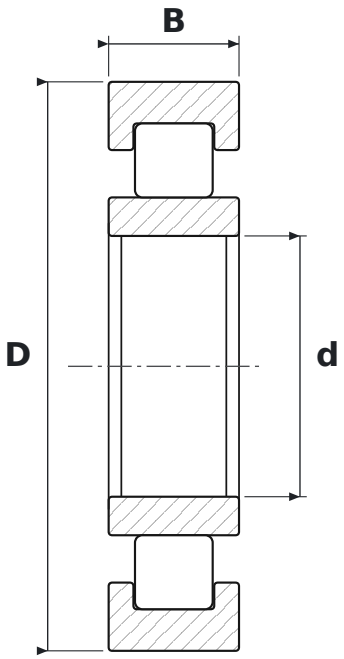

DIMENSIONS

d	bore diameter	**34.93 mm**
D	outside diameter	**76.2 mm**
B	width	**17.46 mm**

SPECIFICATIONS

Manufacturer	**NKE**
Manufacturer designation	**LRJ1.3/8**
Rolling elements	**cylindrical roller bearing**
Radial internal clearance	**CN – normal**
Mass	**0.354 kg**