Cylindrical roller bearing LRJ2.1/4 NKE

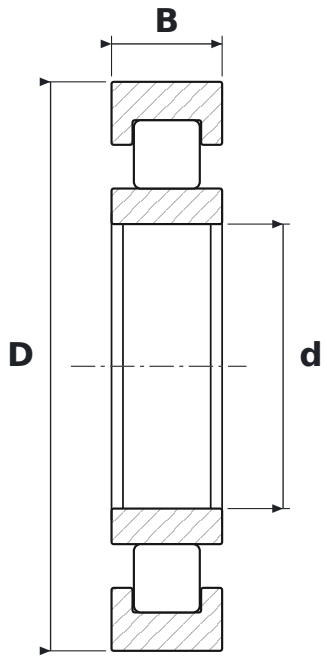

DIMENSIONS

d	bore diameter	**57.15 mm**
D	outside diameter	**114.3 mm**
B	width	**22.22 mm**

SPECIFICATIONS

Manufacturer	**NKE**
Manufacturer designation	**LRJ2.1/4**
Rolling elements	**cylindrical roller bearing**
Radial internal clearance	**CN – normal**
Mass	**1.01 kg**