Cylindrical roller bearing MRJ1.1/8 C3 NKE

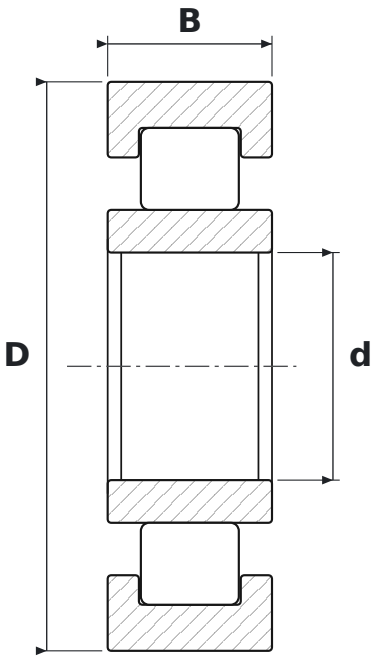

DIMENSIONS

d	bore diameter	**28.57 mm**
D	outside diameter	**71.43 mm**
B	width	**20.63 mm**

SPECIFICATIONS

Manufacturer	**NKE**
Manufacturer designation	**MRJ1.1/8 C3**
Rolling elements	**cylindrical roller bearing**
Radial internal clearance	**CN – normal**
Mass	**0.372 kg**