Cylindrical roller bearing MRJ1.3/4 NKE

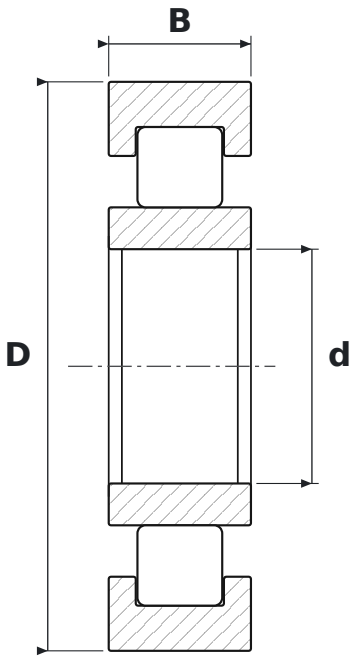

DIMENSIONS

d	bore diameter	**44.45 mm**
D	outside diameter	**107.95 mm**
B	width	**26.99 mm**

SPECIFICATIONS

Manufacturer	**NKE**
Manufacturer designation	**MRJ1.3/4**
Rolling elements	**cylindrical roller bearing**
Radial internal clearance	**CN – normal**