Cylindrical roller bearing MRJ1 NKE

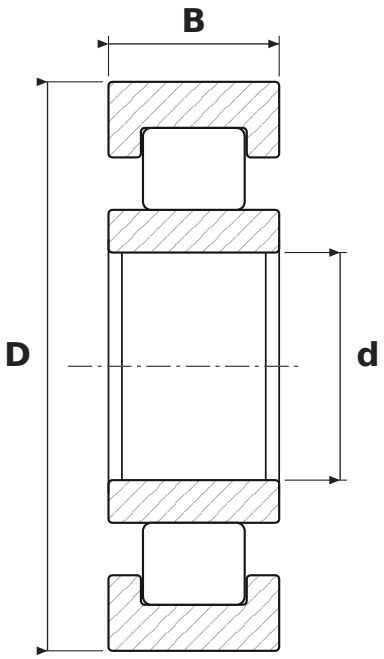

DIMENSIONS

d	bore diameter	**25.4 mm**
D	outside diameter	**63.5 mm**
B	width	**19.05 mm**

SPECIFICATIONS

Manufacturer	**NKE**
Manufacturer designation	**MRJ1**
Rolling elements	**cylindrical roller bearing**
Radial internal clearance	**CN – normal**
Mass	**0.278 kg**