Cylindrical roller bearing MRJ2.1/2 C3 NKE

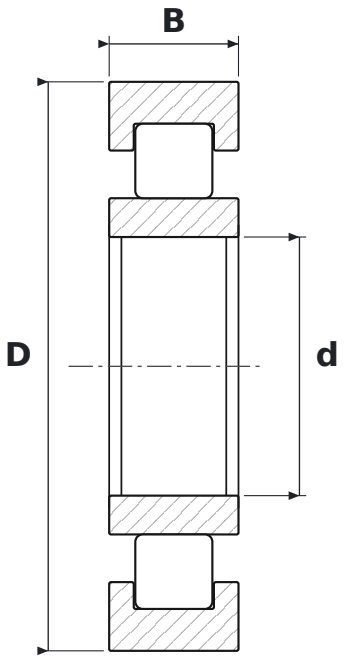

DIMENSIONS

d	bore diameter	**63.5 mm**
D	outside diameter	**139.7 mm**
B	width	**31.75 mm**

SPECIFICATIONS

Manufacturer	**NKE**
Manufacturer designation	**MRJ2.1/2 C3**
Rolling elements	**cylindrical roller bearing**
Radial internal clearance	**CN – normal**
Mass	**2.206 kg**