Cylindrical roller bearing MRJ2.3/4 NKE

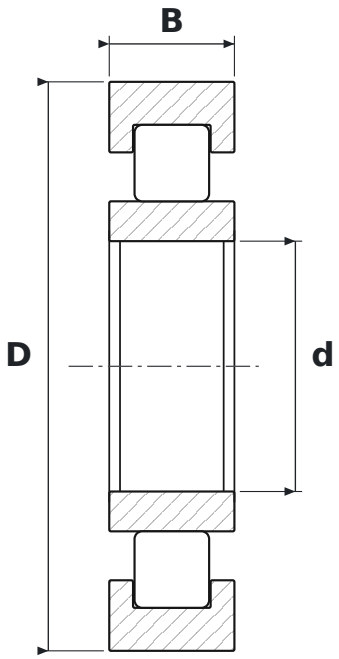

DIMENSIONS

d	bore diameter	**69.85 mm**
D	outside diameter	**158.75 mm**
B	width	**34.92 mm**

SPECIFICATIONS

Manufacturer	**NKE**
Manufacturer designation	**MRJ2.3/4**
Rolling elements	**cylindrical roller bearing**
Radial internal clearance	**CN – normal**
Mass	**3.42 kg**