Cylindrical roller bearing MRJA1.1/8 NKE

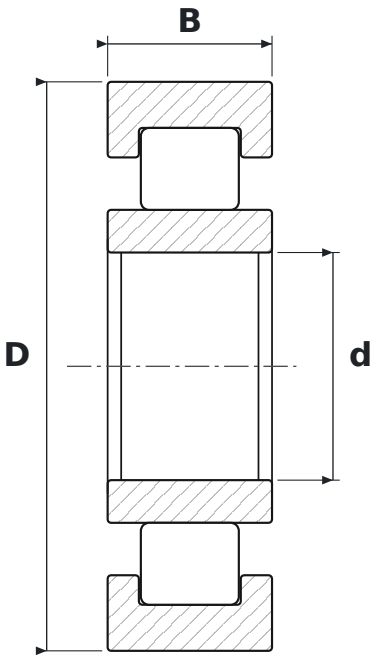

DIMENSIONS

d	bore diameter	**28.58 mm**
D	outside diameter	**71.44 mm**
B	width	**20.64 mm**

SPECIFICATIONS

Manufacturer	**NKE**
Manufacturer designation	**MRJA1.1/8**
Rolling elements	**cylindrical roller bearing**
Radial internal clearance	**CN – normal**