Cylindrical roller bearing N206 ET NSK

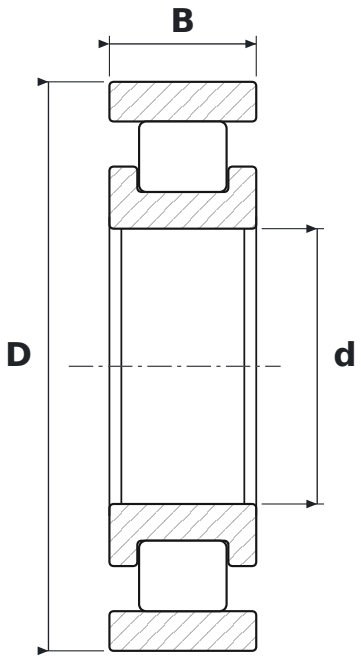

DIMENSIONS

d	bore diameter	**30 mm**
D	outside diameter	**62 mm**
B	width	**16 mm**

WHAT N206 ET MEANS

E	reinforced design, higher load rating
T	koszyk z poliamidu 66 wzmocnionego włóknem szklanym

SPECIFICATIONS

Manufacturer	**NSK**
Manufacturer designation	**N206 ET**
Rolling elements	**single-row cylindrical roller bearing**