# Cylindrical roller bearing N310 ETVPC3 NKE

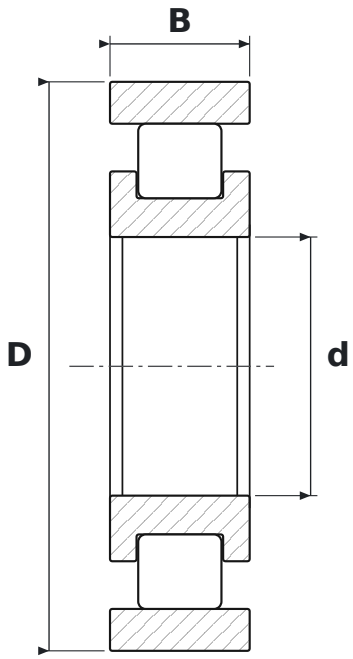


## DIMENSIONS

| | | |
|---|---|---|
| **d** | bore diameter | **50 mm** |
| **D** | outside diameter | **110 mm** |
| **B** | width | **27 mm** |

## WHAT N310 ETVPC3 MEANS

| | |
|---|---|
| **E** | wzmocniona konstrukcja wewnętrzna – większa nośność promieniowa przy tych samych wymiarach |
| **TVP** | koszyk poliamidowy okienkowy |
| **C3** | radial clearance greater than normal |

## SPECIFICATIONS

| | |
|---|---|
| Manufacturer | **NKE** |
| Manufacturer designation | **N310 ETVPC3** |
| Rolling elements | **single-row cylindrical roller bearing** |
| Mass | **1.2 kg** |