CASTOMER

DATASHEET

Cylindrical roller bearing N313 WC3 NSK

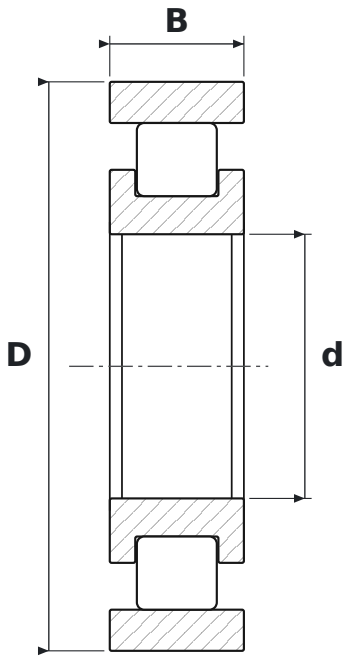

DIMENSIONS

d	bore diameter	**65 mm**
D	outside diameter	**140 mm**
B	width	**33 mm**

WHAT N313 WC3 MEANS

W	koszyk stalowy tłoczony
C3	radial clearance greater than normal

SPECIFICATIONS

Manufacturer	**NSK**
Manufacturer designation	**N313 WC3**
Rolling elements	**single-row cylindrical roller bearing**