# Cylindrical roller bearing N315 W NSK

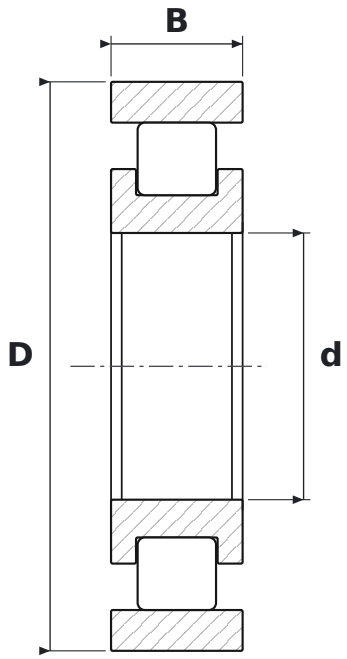


## DIMENSIONS

| | | |
|---|---|---|
| **d** | bore diameter | **75 mm** |
| **D** | outside diameter | **160 mm** |
| **B** | width | **37 mm** |

## SPECIFICATIONS

| | |
|---|---|
| Manufacturer | **NSK** |
| Manufacturer designation | **N315 W** |
| Rolling elements | **single-row cylindrical roller bearing** |
| Seal | **open – no seals** |
| Radial internal clearance | **CN – normal** |